1 inch=25.4mm

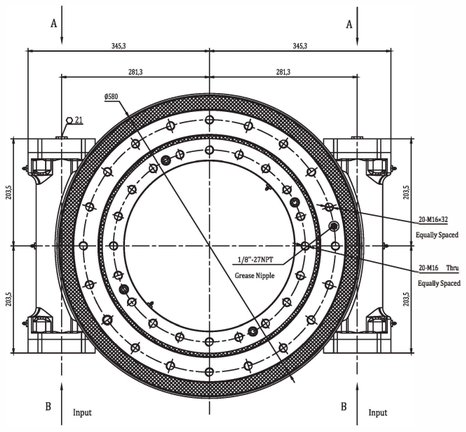

117 kg

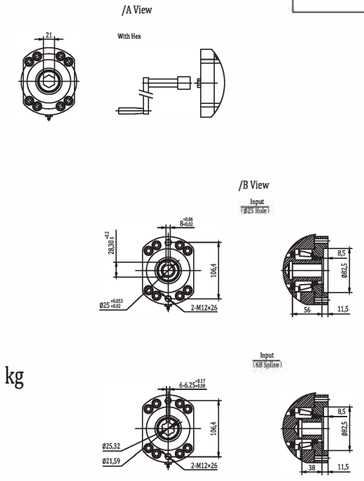

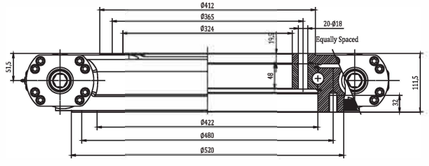

WH17-2

Slewing Drive

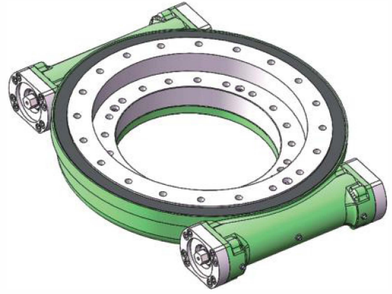

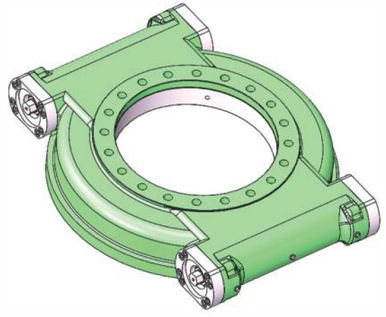

WH17-2 Slewing Drive Performance Parameters

Gear Ratio	102:1	
Output Torque（max.）	32.6 kN.m	24.1×10^3 lbf.ft
Tilting Moment（max.）	160 kN.m	118×10^3 lbf.ft
Holding Torque	152 kN.m	112.2×10^3 lbf.ft
Static Axial Load Rating	1110 kN	249.8×10^3 lbf
Static Radial Load Rating	414 kN	93.2×10^3 lbf
Mechanical Efficiency	40%	
Self-locking	Reliable static self-locking	
Precision	≤0.2°	
IP Class	IP65	

MOMENT LOAD CHART
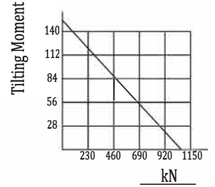
Axial Load & Tilting Moment