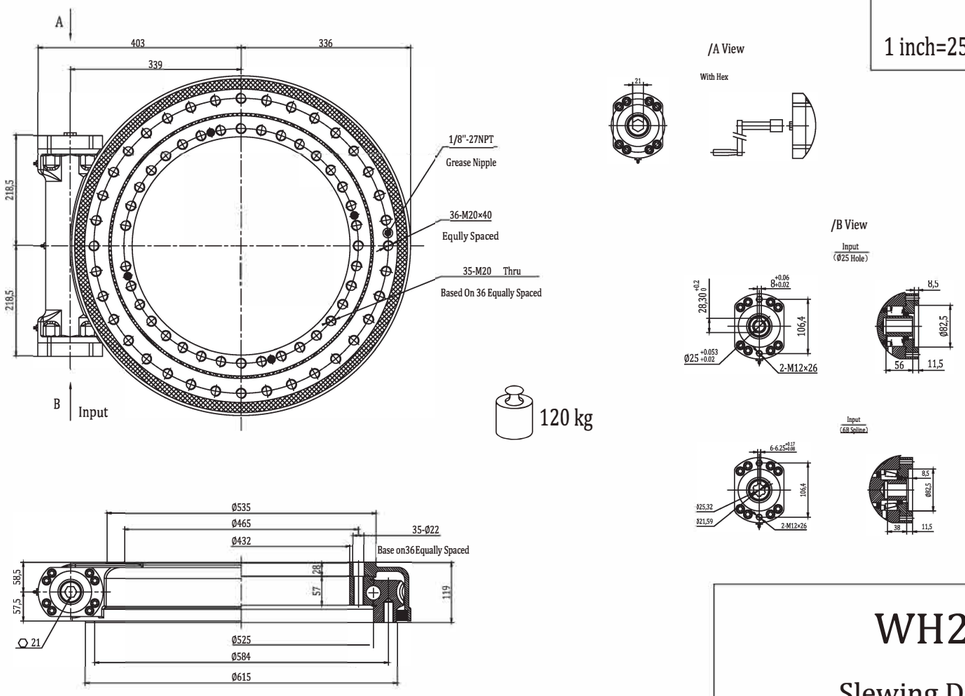

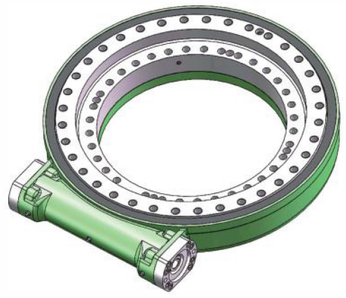

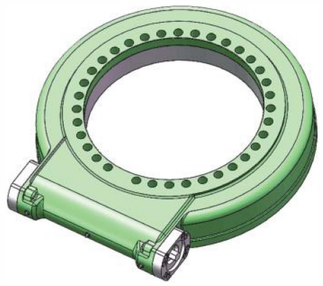

WH21 Slewing Drive Performance Parameters
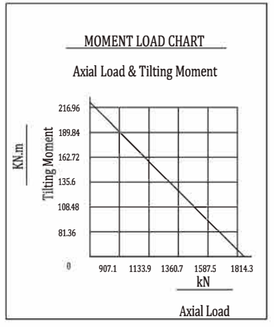
Gear Ratio	125:1	
Output Torque（max.）	30 kN.m	22.1×10^3 lbf.ft
Tilting Moment（max.）	223 kN.m	164.6×10^3 lbf.ft
Holding Torque	140 kN.m	103.3×10^3 lbf.ft
Static Axial Load Rating	1917 kN	431.3×10^3 lbf
Static Radial Load Rating	768 kN	172.8×10^3 lbf
Mechanical Efficiency	40%	
Self-locking	Reliable static self-locking	
Precision	≤0.2°	
IP Class	IP65