1 inch=25.4mm

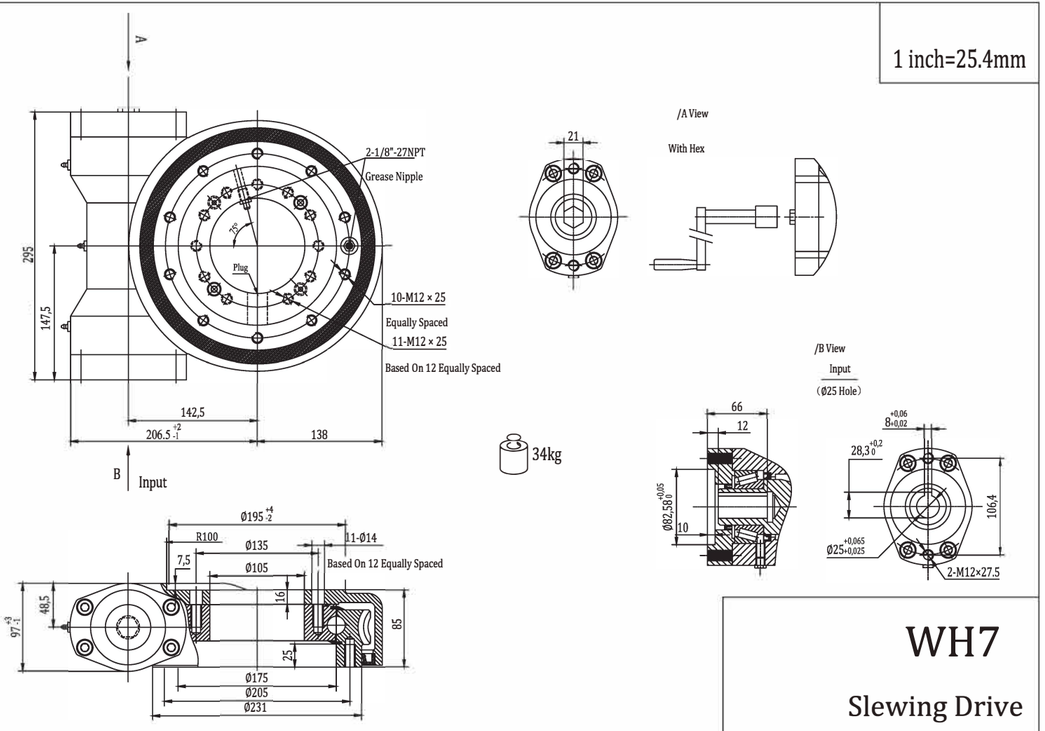

WH7

Slewing Drive

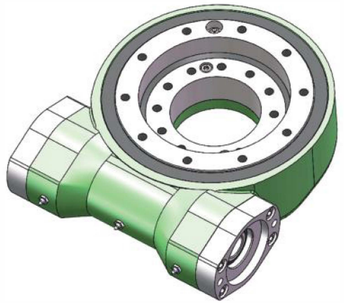

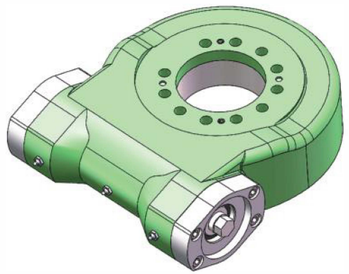

WH7 Slewing Drive Performance Parameters

Gear Ratio	47:1	
Output Torque（max.）	11.2 kN.m	8.27×10^3 lbf.ft
Tilting Moment（max.）	20.8 kN.m	15.35×10^3 lbf.ft
Holding Torque	24 kN.m	17.71×10^3 lbf.ft
Static Axial Load Rating	220 kN	49.5×10^3 lbf
Static Radial Load Rating	90 kN	20.25×10^3 lbf
Mechanical Efficiency	40%	
Self-locking	Reliable static self-locking	
Precision	≤0.2°	
IP Class	IP65	
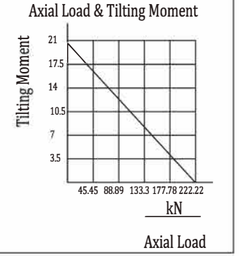
MOMENT LOAD CHART